CHAPTER NINE

Special Situations

When you have completed this section you will recognize some normal and abnormal construction techniques, which are conducive to wood destroying insect infestations. You will recognize some construction problems, which make effective treatment for WDI's very difficult if not impossible.

POST AND BEAM CONSTRUCTION:

This type of construction is found in areas where the soil grade is not level. Posts more than six inches in diameter are set into holes about three feet deep. The length of the posts is selected to suit the grade. Long cleats are attached to both sides of these posts and the structure is supported on these cleats. These are often flat roof residences in recreational areas. The entire structure is made of wood. Anticipate this type of construction in structures originally designed for vacation camps or summer camps then subsequently used for year around residence. Modern home construction or commercial buildings often have posts made of metal.

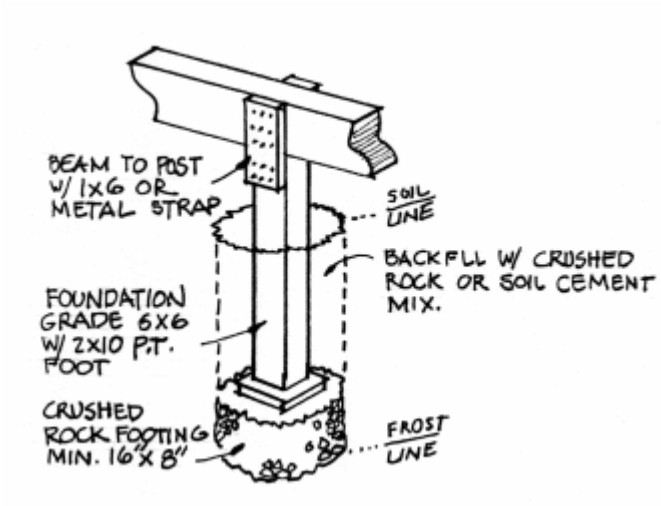

Figure 9-1

TYPES OF ROOF MATERIALS AND DESIGN:

Pitched roofs are normally made of asbestos or asphalt shingles, composite roofs, cedar shakes, slate, fiberglass shingles or sections, or metal. Flat roofs are often fabricated from rubber or asphalt/felt composition. Water can enter around improper roof flashing, backsplashes and failing roof vent sleeves.

Tile roofs are made with many air spaces under and around them. Water is channeled onto tile surfaces and away from the air spaces. Small animals, insects, leaves, etc. get into the air spaces and cause damage, or cause water to be diverted or wicked into air spaces under the roofing.

Metal roofs may produce condensation on the underside if improperly installed.

In some areas, straw thatch roofs have made a comeback. If improperly installed, they will rot quickly, and become a harborage for various insects and rodents.

Improperly vented attic areas below the roof will accumulate moisture and provide a harborage for carpenter ants and other Wood Destroying Insects (WDIs).

Figure 9-2

TYPES OF DOORS:

Exterior doors can become sources of problems with insects if they are improperly flashed and maintained. Moisture entering around chipped paint, missing caulk, and hardware open to the weather can be a source for WDI activity.

Figure 9-3

COMPONENTS OF A WINDOW:

The complex nature of construction around a window opening: Framing, flashing, exterior foam insulation systems (EIFS), sliding track, caulk, glass, and mixed construction materials, makes these an excellent area for insect entry if improperly maintained.

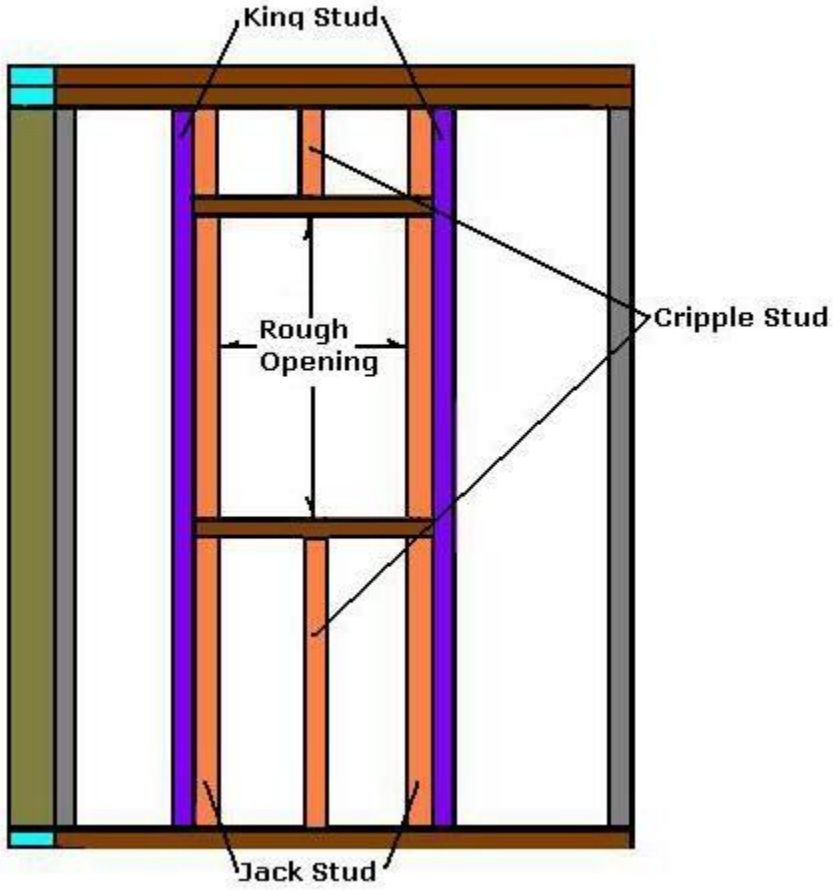

Figure 9-4

Decks

The current popularity of wood decks around houses recalls the previous era when houses were built with large veranda porches. In both instances the carpenters often placed wood in contact with soil. The newer decks, which are treated with Chromate Copper Arsenate (CCA), Amine Copper Quat (ACQ), Copper Azone (CA) or other preservatives, are said to be insect proof. Carpenters saw through the treated surface, drive nails, drill bolt holes, etc. thus breaking the toxicant barrier. Moisture and insects can enter easily. Often these decks or porches have no room for access underneath.

In older homes, decks are often seen as an inexpensive means to cover over a concrete patio that has cracked or developed other structural problems. Because they are outdoors, exposed to weather and insect attack, they require the careful concern of a WDI inspector.

Figure 9-5

Rooftop Decks

Decks on the top of flat-roofed houses are an immediate red flag to a WDI inspector. The use of the roof as a bearing surface for loads it was never intended to hold often breaks the roofing seal. It is possible for moisture and insects to gain access to the joists below. Since these joists are inaccessible, insect activity and/or damage may be undetectable.

Figure 9-6

Fences

Ornamental wood fences abound in suburbia. Wood posts buried in soil, or worse, in concrete, are open invitations for insects to attack. Some wooden posts are pressure-treated, but the actual fencing material is often untreated wood. Digging around the grass growing at the base of the fence posts often discloses evidence of insect attack. Finding wood destroying insects in this area does not signify an infested structure, although if the fence is directly attached to the structure, the implications are obvious. If the inspector believes this problem is important to the buyer, he will report this observation in the comments section of the inspection report (NPMA-33).

Figure 9-7

Firewood

Firewood stacked on the ground against or near the structure requires close attention. WDI's often attack these piles. If the piles are infested and the inspector fails to report the infestation, the situation may lead to litigation or at the very least a combative customer. Even if clear of pests, the firewood pile may find a place on the inspection graph. If it is on the ground and too close to the house, our duty to disclose may require such reporting.

Figure 9-8

Moisture Conditions

Frequently watered areas near the structure foundation will attract the inspector's attention (e.g. a broken down spout, a leaky faucet or a leaky air conditioner). Termiticide applied to these areas may have been washed away (or leached from the soil) and the protection with it. Any wood nearby should be examined. Wood mulch around a structure creates a condition favorable for termite activity. If the structure was treated years ago, layers of untreated mulch can be a pathway for insects to enter the house. On the sunny side if the structure, the warm wood chip mulch can be a nursery for new termite colonies. On the rainy, wet north side of the house, the continuous moisture can encourage nearby termite colonies to move toward the house. Properly applied termiticides may be ineffective in such situations. Woody plant roots nearby may provide insect harborage. Excessive plant cover limits the inspection, which can be performed. These plants can also limit the amount or drying air movement between the structure and the shrubs. Woody shrubs put out new feeder rootlets each spring. Each fall these soft, tender, young rootlets die., creating an ideal food source for worker termites. Termite swarmers can be blown into the shrubs and use the protected soil under them as a place to start colonies. The winter conditions may never penetrate these eco-niches under these heavy shrubs.

Figure 9-9

Miscellaneous Construction Elements

Hollow pillars supporting porches are magnets for Carpenter ant colonies. Carpenter ants establish satellite colonies near food sources, and the pillars provide access into the house.
Inspect **porch steps** to see if they touch the soil. The porch surface must slope away from the house to carry rain away quickly. A 5% pitch is usually sufficient. Tongue-and-groove flooring is a water trap. Check the space between the porch and the building for drainage problems. Weeds or other plants growing between porches, patios and the main house structure tells the inspector a possible termite entry has been located.
Flower boxes and planters are difficult inspection areas. Does the flower box have a bottom, or is it open to the soil underneath? Is there a side of the flower box against the outside wall of the house, or does the soil in the box contact the house wall? Even if the soil in the box was treated several years ago, fertilizers and gardening may have broken any protective barrier, which may have been established.
The **expansion joint** between the garage slab and the house may have a form board or old grade stakes buried in it. But, even without these form boards or grade stakes, the cold joint or expansion joint itself may allow entry by insects.
Untreated (or even treated) **exterior wood steps** near or in contact with soil deserve special attention. Moisture from rain and from the soil provides an excellent habitat for wood destroying insects. Probing, sounding, and visual inspection is needed.
Exterior soil within six inches of the siding should attract the inspector. Wood chips and bark mulches often are piled against the siding for aesthetic reasons. Insects use this as a protected avenue into the wood of the structure.
Faulty grades can cause water to flow toward the house foundation, and then keep the soil moist, soft and favorable for termite culture. Water flowing through the soil can carry termiticides away from the site of application.
Cracks in foundation walls can allow termites free entry into the structure.
Coursed Rubble and **Ashlar Stone** foundations have enormous numbers of cracks. Failure of control procedures in structures with rubble or stone foundations is common and may influence the consideration and comments on the inspector's report. Poorly built slab homes often have "hidden" wood/soil contact. Hastily built houses often have the floating slab concrete poured on top of soil that is piled against the inner side of the sill plate. This is often impossible to spot. Measuring floor levels inside against the top of the foundation outside may offer help, but not always. The warming and cooling of the concrete slab many times adds to the complexity of this situation.

On exterior walls, rusty nails, or nail staining indicates moisture within the wall. Stained or buckling siding (with or without peeling paint) is a symptom of underlying moisture, perhaps the result of splashing rain. Inspect carefully exposed lumber ends and where wood pieces join. Corners, edges of walls, roof/siding intersections and siding/chimney intersections and cracked stucco are vulnerable to insect attack. Moisture is often associated with dryer vents, pipes & ducts, and poorly flashed and maintained window frames.

Sumps, and **sub floor drainage systems** may cause major problems for a company which tries to treat a structure. Should the inspecting company be required to treat a property just inspected with such a system, the treatment techniques needed may be very costly to perform. The existence of such a system can signal a moisture problem. Perhaps caused by a faulty grade outside or a house built within a high water table region. Some inspectors report that in some areas French drains have an anticipated life of about fifteen years. After that the drainage system has filled with silt and is no longer efficient. This may result in a moisture problem inside the structure.
Hot air heat ducts within a slab are a potential blessing to wood destroying insects and a potential curse to the homeowner who owns such a heating system. Safe, effective treatment techniques are few, and the chance of infestation is high. The inspector reporting on such structures should take nothing for granted. His report should be as extensive, complete, clear and accurate as possible.

Figure 9-11

Radiant heat cables or pipes in the slab of the structure are almost as much of a problem as the heat ducts mentioned above, only the safety hazard factor is <u>less</u>. Inspection is limited. The constantly warm concrete floor is a termite's delight. Inspections made on these homes should be reported with as much information to the buyer as possible about the termite hazard.

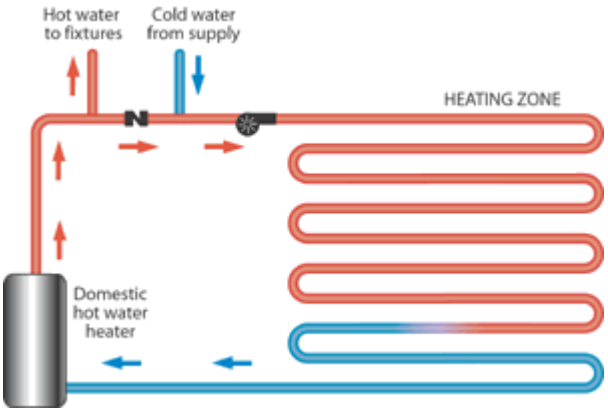

Figure 9-12

Hardwood parquet tiles glued to cement floors are another problem similar to the one just before mentioned. Curing concrete always develops hairline cracks. Slabs in hastily built structures may vary in thickness. Termites may be able to enter through these cracks and attack the parquet tiles. Inspection for this situation is difficult. Carpeting, furniture, and throw rugs can cover these problems easily.

Figure 9-13

Inaccessible crawl spaces can conceal hidden evidence. If walking heavily on the floor above results in the feeling that the floor is weak, the inspector should report this and suggest the inaccessible area be opened and another inspection be ordered with an amended report prepared for an additional fee.
A water **well or cistern** within the foundation walls can cause concerns about possible treatment techniques. The existence of these may signal a moisture problem within the structure. The reality of these should be graphed and strong wording included on the report about who would be responsible for any future costs for treatments and preparations for treatment.

Figure 9-15

Exhaust fan vents, from bathrooms and laundry rooms, may vent into attic or crawl spaces. **Air conditioner drip lines** may leak into wall voids. These and other similar situations can keep moisture levels within the structure high and allow survival of an aerial termite or Carpenter Ant colonies. Infestation of beetles and carpenter ants can also be encouraged by such poor construction practices.

Water, which has leaked inside a wall filled with insulation, can remain there indefinitely. For example: a leaky window mounted air conditioner has been replaced with a new air conditioner leaving the fiberglass insulation wringing wet and not replaced. The window frame was flashed, caulked and sealed. The moisture can remain in that wall for years.

Settling of fill under concrete slabs, stairs, and porches causes unsupported cement to crack. Cracks allow insect entry, often in hidden areas. This settling of fill is a normal occurrence. Improper construction methods can leave the hidden sections of foundation walls unfinished. This unfinished area may be covered with interior wall board. Termites take advantage of this and build shelter tubes on the warm underside of the concrete slab above the surface of the settled fill. Routine termiticide applications to the fill may not affect the termites protected in the shelter tubes above. Cracks often occur under partition walls. When first constructed, the walls carried no weight. Over time the structure may settle slightly and some weight may be placed on the wall. The wall sill is held to the concrete by nails “gunned” into the floor. Cracks can form and termites enter. Although it's unusual, a new building may be severely damaged during its first few years. This may happen when wood debris, usually tree stumps and roots containing large, active ant or termite colonies, are left in the soil at the building site.

Utility pipe penetrations through slab floors can provide access for the termites described in the paragraph above. As the newly poured concrete cures, it shrinks from around these pipes. Often builders will wrap these pipes in felt paper or foam collars, more termite worker dessert dishes. These penetrations are often inside partition walls and so are impossible to see. Baths, kitchens, wet bars, air conditioner water collectors, steam radiator bleeder collectors can all provide evidence of such penetrations.

Wooden form boards are sometimes left in the holes through concrete slabs where bathtubs, or sink drains, etc. exit the building. Instructions on the NPMA-33 may require opening of these areas for inspection.

Figure 9-15

Inspect the floor around **the toilet base** by thumping lightly. Check beneath the toilet to see whether leakage has caused damage. Check the tub and shower perimeter for a sound caulk seal. Look for shower splash-over onto the bathroom floor. A check on the ceilings below bathrooms may provide additional evidence of water problems. Look for water condensation and leaks where kitchen pipes enter walls. See figure 10 – 55. Forced hot air **furnaces** near outside walls, and hot air ducts ending near outside walls keep the building and in the adjacent soil in those areas warm year-round. Soil warmed by the heating unit may encourage the development of fungi and insects. Should these warm spots be near a large tree or shrub, a front porch, an attached slab, or any other cover providing insects protection from the weather, the chances of WDI activity is greatly increased.

Figure 9-16

Fireplaces, the real ones with foundations, are difficult inspection scenarios. Sometimes the fireplace foundation is inadequate. The fireplace begins to fall away from the house leaving an entrance for rainwater and insects. If the fireplace is used, the bricks are warm during the winter. Sometimes the chimney of the fireplace is shared with the furnace. Exhaust gases from the furnace keep the bricks warm. Newly established termite colonies may take advantage of this warmth.

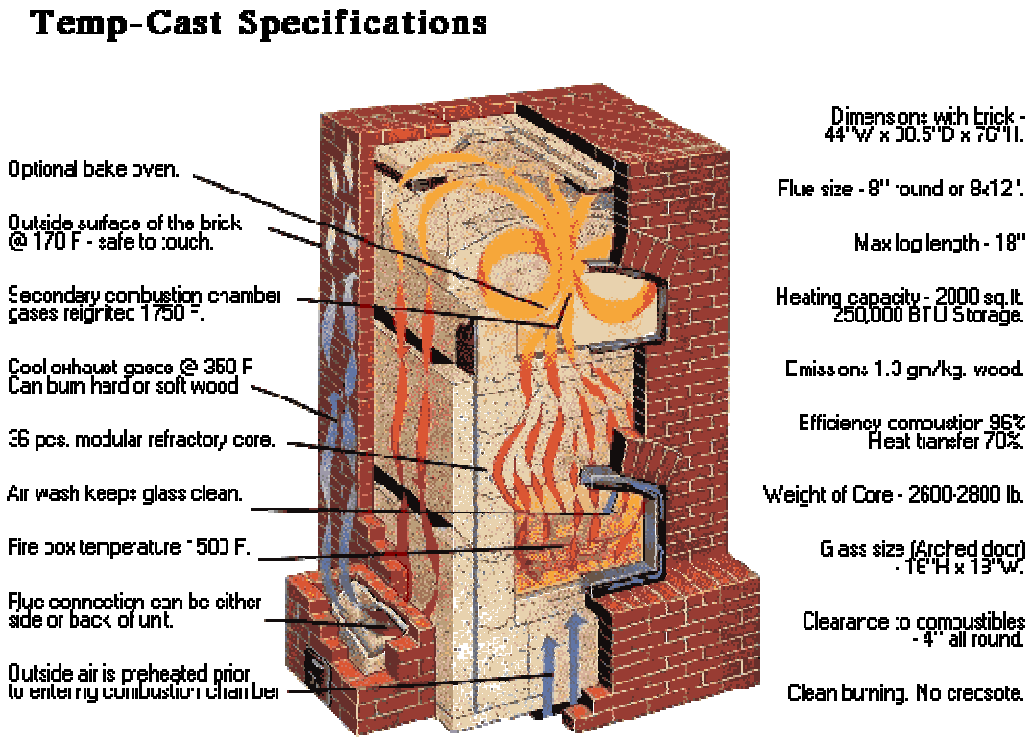

Figure 9-17

Remodeling of structures often results in **double foundations** where additions have been attached. A second foundation is placed alongside the original foundation to support the new addition. These situations allow hidden access for insects, hidden areas for moisture to cause problems, and because they're hidden, problems in treating. Information provided by the property owner is the only way the inspector is aware this situation exists.

Figure 9-18

Older houses, especially in certain areas of cities, often have several layers of floor over **unknown surfaces**. When suspected this should be a red flag to cause you to do a more thorough inspection and a careful report.

Crawl spaces and roof air spaces are normally vented to help moist air escape. Our climate is very vulnerable to dry-rot fungus. There should be adequate **ventilation**. Vegetation outside or storage inside should not obstruct vents. Discoloration or staining would signal an area with moisture levels high enough to support fungi. Inspect for condensation on the subfloor and/or sill. Modern building codes require a moisture barrier.

Sometimes the problem construction techniques listed above can result in aerial or **secondary infestations** of termites. These are normally found <u>after</u> termite treatment has been performed. These are suspended termite colonies that usually have found another source of moisture such as from a plumbing leak, a roof leak, around a shower stall or bath tub, leaky window frames, or condensation forming on the impermeable

side of improperly installed insulation. Often these colonies are hidden behind cabinets, shelving and appliances and so are not visible during inspections. Termite colonies in this situation no longer have a need for contact with the ground. When these termites inside are cut off from the controlling hormones of the queen termite in the soil, the supplementary reproductives become kings and queens. This “aerial” or secondary colony can develop rapidly. Determine, if possible, whether there is a source of moisture that is enabling the termite colony to survive without ground contact and have this corrected. The seller may need to open any area of suspected damage or infestation. Suggest treatment, using techniques different from those used on the first set of treatments. The inspecting company may issue a conditional report, suggesting the possible need for additional opening of areas for inspection, repair, and treatment.

WELLS

Drinking water wells are of several types. The common dug well with loose laid brick or stone and carrying a water level from 5 to 20 feet below grade presents a potential moisture condition. A source of moisture so close to the structure can offer termites an opportunity to thrive. Often in modern times these dug wells have dried up. The property owner has had a well driven through the bottom of the dug well. The dug well now becomes the pump house. These wells are often completely inaccessible. Equally as often, their existence is unknown to the homeowner.

Cisterns and spring boxes too are attractive to termites and should, if possible and safe, and should be inspected on the inside. Cistern walls are porous and may provide a moisture source for a colony. The cistern usually accumulates water from the roof of the house. Therefore it will be found inside the house or very near the foundation. Spring boxes were built inside houses in our very early history. More recently they have been placed outside. Some houses have had additions built over the wells, cisterns, and spring boxes, and they are now located on the inside of structures. These situations sometimes go undetected because they are located in inaccessible areas.

SIGNS OF PREVIOUS TREATMENT:

Since the 1930’s many techniques have been adopted and discarded in our efforts to control the Eastern Subterranean Termite.

Earliest techniques involved soil treatment with arsenicals. Various witches’ brews were concocted by individual companies in an effort to provide an effective, long lasting barrier between the termites in the soil and the cellulose in the structure. Wood treatments were also attempted. Coal tar creosote, similar to that used on railroad ties was tried. Esthetics and lingering obnoxious odors were the limiting factors in the use of creosote. Should the inspector find entire wood surfaces covered with a dark brown to black oily stain, this might be a sign it was treated.

Pentachlorophenol and chromated copper arsenate forced into the pores of the wood in high-pressure vats provided effective protection for the treated wood. The treating costs made extensive use prohibitive. Termites are able to construct their shelter tubes over this wood to reach other, untreated wood in the structure. There is no method of recognizing pentacholorphenol treatments. The familiar copper-greenish color of chromated copper arsenate treatment is often seen in newer homes in sill plates and wood decks.

Houses that had exterior perimeter barriers of arsenical products placed around them are also impossible to recognize. In very rare instances, pest control companies placed signs in basements and crawl spaces notifying those entering the area that treatment had been performed.
Until the 1980's when it was withdrawn from the market, liquid spray Copper Napthenate treatments left a greenish spray-on color on the joists and sub-floor in basements and crawl spaces.
Metal "termite shields" have been placed on top of foundation walls as a partial barrier to keep termites from the cellulose of the structure. Shields are best suited to be an adjunct to a routine termite inspection to help see the termites, since the termites will construct their shelter tubes over them. These shields are often installed improperly or are rendered useless by construction. Exterior siding and interior finished walls often are placed so the shield is covered and crushed against the foundation wall.

Figure 9-19

The development and distribution of **chlorinated hydrocarbon insecticides** after 1945 gave pest control companies more effective tools. Dieldrin, Aldrin, Heptachlor, and Chlordane immediately replaced the earlier products. These products were less hazardous to the user and property owner and so were used in more structures and in more application sites within a structure. Techniques were developed which allowed treatment of wood situated inside structures.

Aldrin was injected into the ends of joists, into sill plates and mud-sills through small drilled holes. These holes are easily recognizable; they're a bit larger than 1/4". They are of similar size and are placed in regular fashion throughout the basement or crawl

space, usually near areas of wood-soil contact. These holes might be confused with the newer wood injection technique with chlorpyrifos aerosols. The newer holes are smaller than 1/4". The Aldrin treatment holes will be larger, more numerous, and throughout the area. These holes were not usually plugged. The newer techniques are used in specific restricted areas only near to beetle and termite infestation and damage. They are probably not plugged with a dowel.

Some companies who formulated their own termiticides used boric acid in a water solution as a wood injection product. Small holes would he drilled on the surface of infested wood and boric acid would be sprayed onto the wood. This treatment predates the very new treatments with sodium borates, which are recently developing adherents in our industry. These new treatments look the same as the historic treatments. Sodium Borate product manufacturers are now recommending injecting the sodium borate solution, through holes bored into the wood, under pressure, directly into insect infested wood.

Many companies developed products, which might be sprayed onto the surface of wood as a termite deterrent. Most of these soaked in, leaving at most a small layer of crystals on the wood. These would be mostly painted over, wiped off, or shaken off by the routine flexing of the joists.
Heptachlor was mixed into a mayonnaise-like substance. Loaded into a caulking tube, it was placed on the ends of joists, mudsills and sill plates. Window frames, which lacked a paint finish, might also have been treated. This substance soaked very slowly into the wood. Over time dust, dirt, etc. would stick to the oily spots and turn them darker than the rest of the wood.
Dieldrin was formulated into a heavy tar substance and used as a sealer to seal foundation cracks which allowed termite entry. This product may be found in expansion joints. It can easily he confused with non-insecticidal sealers. This would be most often found in commercial buildings.

Dieldrin, Aldrin, Heptachlor, and Chlordane were each formulated as a liquid and injected into the soil under and around the exterior of structures to form a “protective barrier”. These treatments cannot be recognized except when treatment was made under concrete pads. This will be discussed later. Heptachlor and Chlordane were formulated as granules and were buried in trenches around structures or sprinkled on the soil around the building perimeter.

In 2006 a termiticide manufacturer revived the soil sprinkling treatment for termite control. As before, this type of treatment cannot be recognized by the inspector.

In the late 1950’s a company marketed a treating system made up of polyethylene pipes placed about the building during construction. Periodically, a reservoir could be filled with a liquid termiticide. This liquid was carried about the building to add product to the “hot spots” providing a periodic retreatment for the building. In the twenty first century, companies are building structures with tubes buried inside walls, which will “hear” termite activity when a “reading device” is attached to these tubes.

For a very short time a product called MIREX was soaked into wooden stakes. These stakes would be placed around the exterior of a structure as termite bait. The Mirex

would poison the termites, which ate the wood of the stakes. The stakes used by many companies as termite monitors should not he confused with the Mirex stakes. Monitor stakes will usually be found 1 or 2 to a house, usually at a corner. The Mirex stakes will be numerous and found near sites of perceived termite infestation. Construction grade stakes should not be confused with termite bait stakes or termite monitoring stakes.

During this whole period of time, from the 1920's thorough today, a consistently used application technique included drilling through concrete near foundation walls to place the termiticide underneath. Over the years, industry practice on the spacing on these drill holes has shrunk from 24 inches, to 18 inches, to 12 inches. These drill holes are usually found within six inches of the foundation wall inside and out. The drilling of all interior perimeter concrete floors has never been a standard industry practice. Most companies are selective on what floors they drill and where specifically inside structures they will drill. Exterior drilling is more generally an overall industry practice. The drill hole sizes were usually 1/2 or 5/8 inches. Waterproofing companies have used the drill & inject technique too. Their holes are usually placed 24 to 36 inches apart and are 1 to 1 1/2 inches in size. The inspector should not confuse them.

Figure 9-20

Signs of drilling can also be found on interior and exterior wall surfaces. Hollow blocks voids were often drilled either near the sill or near the footer to inject termiticide. Exterior walls are drilled to treat hollow areas behind brick veneer, stucco, or other such spaces where termites might enter. Stone and rubble foundations may have drill marks on them. Often, termites travel through the spaces inside these foundations and treatment is made to seal them off. Around the perimeter of slab structures holes may be

observed in the foundation, which were made when performing a technique called short rodding (or long rodding). These holes will be spaced 12" to 18" apart and will be directly below the bottom of the interior slab. In some instances the holes may be on the exterior at the top of the slab. In this case the holes were made to perform the technique called cross rodding.

Regular cement patches in brick mortar a few inches above ground spaced about every twelve inches can be signs of treatment behind the brick veneer on building exteriors. Interior basement floors may have treatment marks near furnaces; stair stringers, plumbing pipe penetrations, expansion joints and other areas where the treater felt the termites might be able to enter.

Newer treatments for the Eastern Subterranean Termite include placing sand or glass beads of a specific particle size such that the particles are too large for the termite to move and the spaces between the particles are too small for the termite to fit its head through. This sand will be buried underground and will not necessarily be visible on a routine inspection. Another new treatment, which is so new as not to be a factor, is the wrapping of the underside of the structure in a stainless steel mesh or heavy gauge plastic. The size of the mesh is too small for the termite to move through. The mesh will be covered by the exterior of the structure and so will not be visible to the inspector. A manufacturer is marketing insecticide containing heavy vinyl sheet and pipe collars. These are placed under concrete floors and around pipes penetrating those floors. Insects trying to penetrate that vinyl will be stopped.

For over 50 years, conventional termite treating methods placed primary emphasis on application of insecticide materials to wood and/or soil at strategic locations in and around a structure, which, from experience, were found to be common termite infiltration sites.

An alternative technology now on the market involves the introduction of monitoring/baiting stations into the termite's habitat. This concept relies on the natural, random foraging behavior termite's employ in their continuous search for new food sources. Over time, as baits are located, consumed and shared with other colony members, the active ingredients contained within the bait matrix are capable of slowly reducing the termite population in or around the structure. In theory, when the number of colony members is reduced to a critical number, the colony may become incapable of supporting itself and collapses. Unless the bait stations were placed by the inspecting company, the inspector has no knowledge of the status of the stations. The inspector cannot know if the stations are simply insect monitors, or if they contain an insect toxicant.

As listed previously, rigid and liquid exterior foam insulation systems (EIFS) are in use by more and more building contractors. One EIFS manufacturer claims his foam is termite resistant. Research done at recognized universities has not confirmed this claim. There is no way the inspector can confirm the EIFS rigid exterior foam is made of treated material without seeing the bill from the supplier who provided the specific material used in the inspected structure.

Signs of treatment for Carpenter Ants may include drill marks in the window frames where an insecticidal dust was placed.

Most other treatments for other wood destroying insects such as ants and beetles will not leave visible marks for the inspector to see. The inspector will be required to rely on

the word of the tenant or the owner of the property to interpret marks in, on or near the structure.

Suggested Topics For Discussion:

1. Not all the situations listed require reporting. How should the WDI inspector report in-slab heat ducts in order to advise the buyer of the hazards involved?
2. How best can the WDI inspector report inaccessible crawl spaces so that the buyer is properly notified of the problems involved?
3. Choose the best wording for a WDI inspector to use to report a well inside the foundation walls of the structure.
4. What can a WDI inspector report about finished basements in a structure with rubble foundation walls?
5. Is it logical for a WDI inspector to make a point of reporting limbs overhanging the structure? Where does the need to assist the seller end and notify the buyer begin?
6. Should “frequently watered areas” appear on the WDIR, or should this be used only as a guide for the WDI inspector to make a more thorough check near this area?
7. What are some techniques for detecting hidden plumbing lines in walls?
8. Discuss the differences between slabs in basement construction and slab-on-grade construction.
9. Discuss what repaired drill holes might mean in:
    - A. Attached slabs
    - B. Basement floors
    - C. Basement walls
    - D. Garage floors
    - E. Garage walls
    - F. Exterior brick walls
    - G. Exterior foundation walls
        1. Basement structures
        2. Slab structures
            - —Above top of slab
            - —Below bottom of slab
10. Describe the difference between holes drilled to perform treatment for Powder Post Beetles in 1992 using the aerosol chlorpyrifos injection technique and holes drilled in 1968 to treat for subterranean termites using the Aldrin injection method.